SOLATUBE 21-C
CURB-MOUNT FLASHING
HARD CEILING

REVISIONS				
ECO	REV.	DESCRIPTION	DATE	INC.
1314	B	TITLE CHANGE	12/4/2006	CS
	C	ADJUSTED FLASHING DIMENSION CALLOUT	10/30/07	CS
	D	MODIFIED REFLECTOR CALLOUT AND ADDED "CAP" TO DIMENSION CALLOUT IN TOP VIEW	2/21/2008	CS

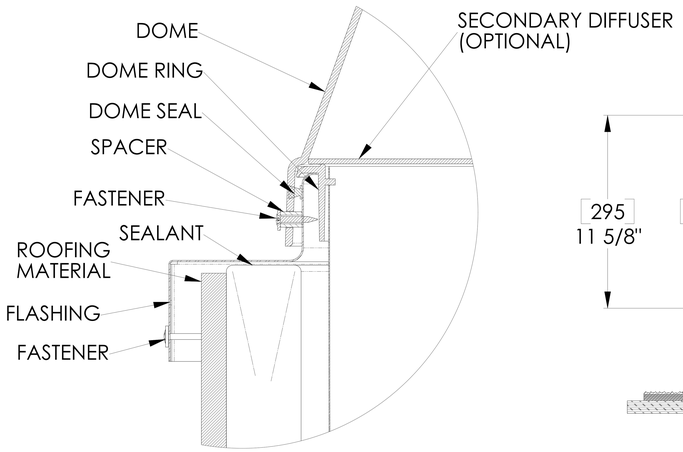

DETAIL A
SCALE 3 : 1

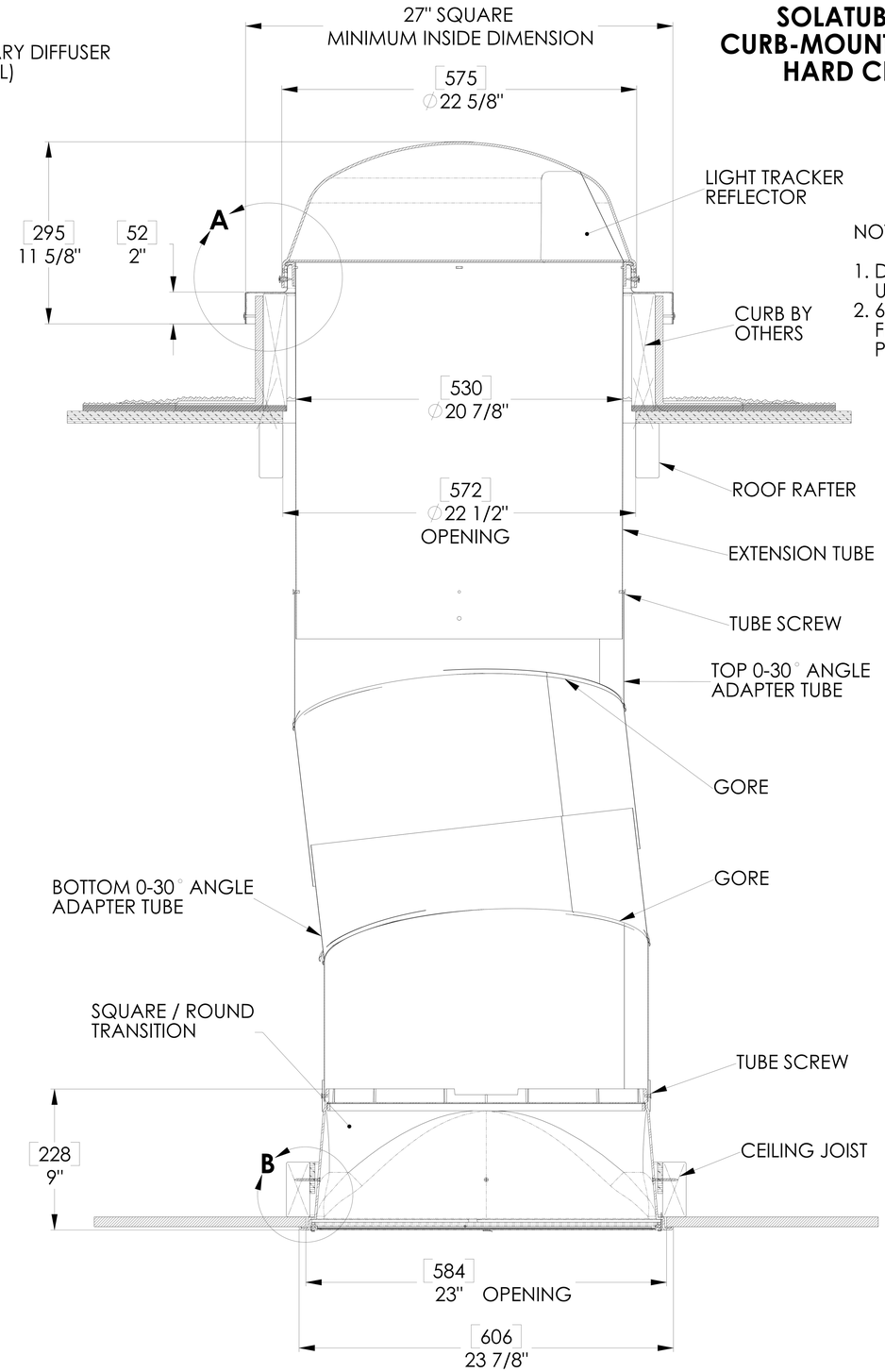

FULL SECTION
SCALE 1:1

NOTES:

1. DIMENSIONS IN BRACKETS ARE METRIC UNLESS OTHERWISE SPECIFIED.
2. 6" MIN. CLEARANCE SHOULD BE MAINTAINED FROM ALL SOLATUBE COMPONENTS AND OTHER PLENUM ELEMENTS.

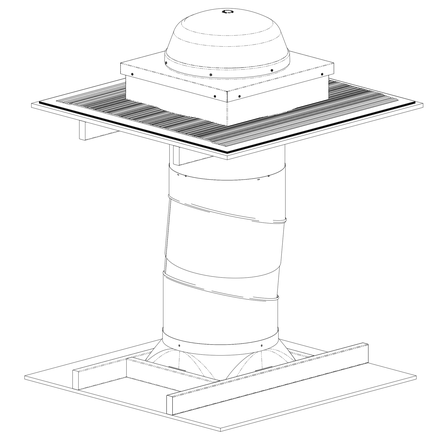

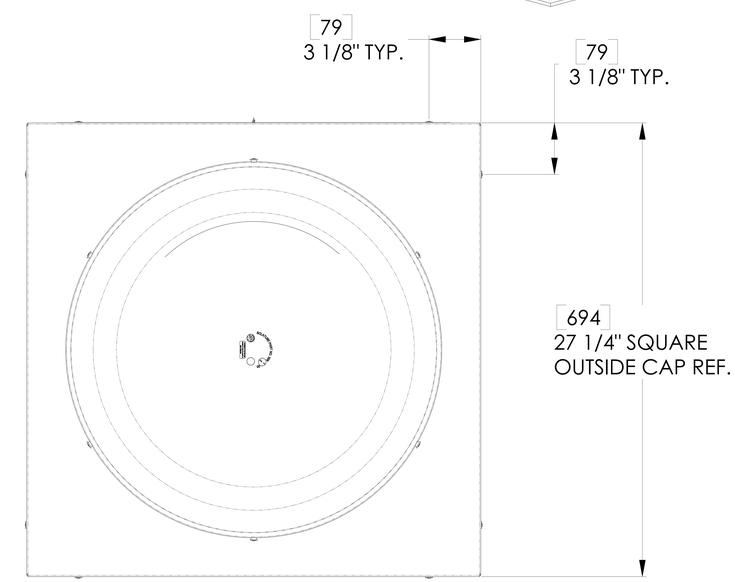

TOP VIEW
SCALE 1:1

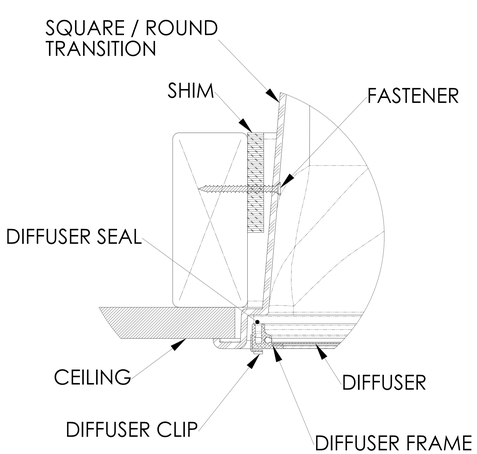

DETAIL B
SCALE 3 : 1

UNLESS OTHERWISE SPECIFIED: DIMENSIONS ARE IN INCHES TOLERANCES: ANGULAR: ±0.5° .X ± .1 .XX ± .02 .XXX ± .005	SOLATUBE INTERNATIONAL, INC. COPYRIGHT 2002 WWW.SOLATUBE.COM	SOLATUBE 2210 OAK RIDGE WAY VISTA, CALIFORNIA 92081-8341 PH (760) 597-4400
MATERIAL -- --	DRAWN BY STEVENS / DATE 2/23/04	TITLE: 21-C CURB-MOUNT FLASHING HARD CEILING
FINISH --	CHECKED BY -- / DATE --	SIZE D / DWG. NO. 21-CF-HC / REV D
DO NOT SCALE DRAWING	APPROVED BY -- / DATE --	SCALE: 1:1 / SHEET 1 OF 1