SOLATUBE 21-C
8" SELF FLASHING
HARD CEILING

REVISIONS				
ECO	REV.	DESCRIPTION	DATE	INC.
	A	RELEASED	3/11/2004	
1314	B	TITLE CHANGE	12/4/2006	CS

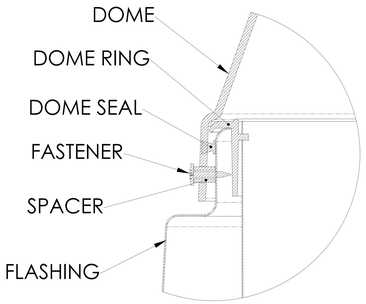

DETAIL B
SCALE 3 : 1

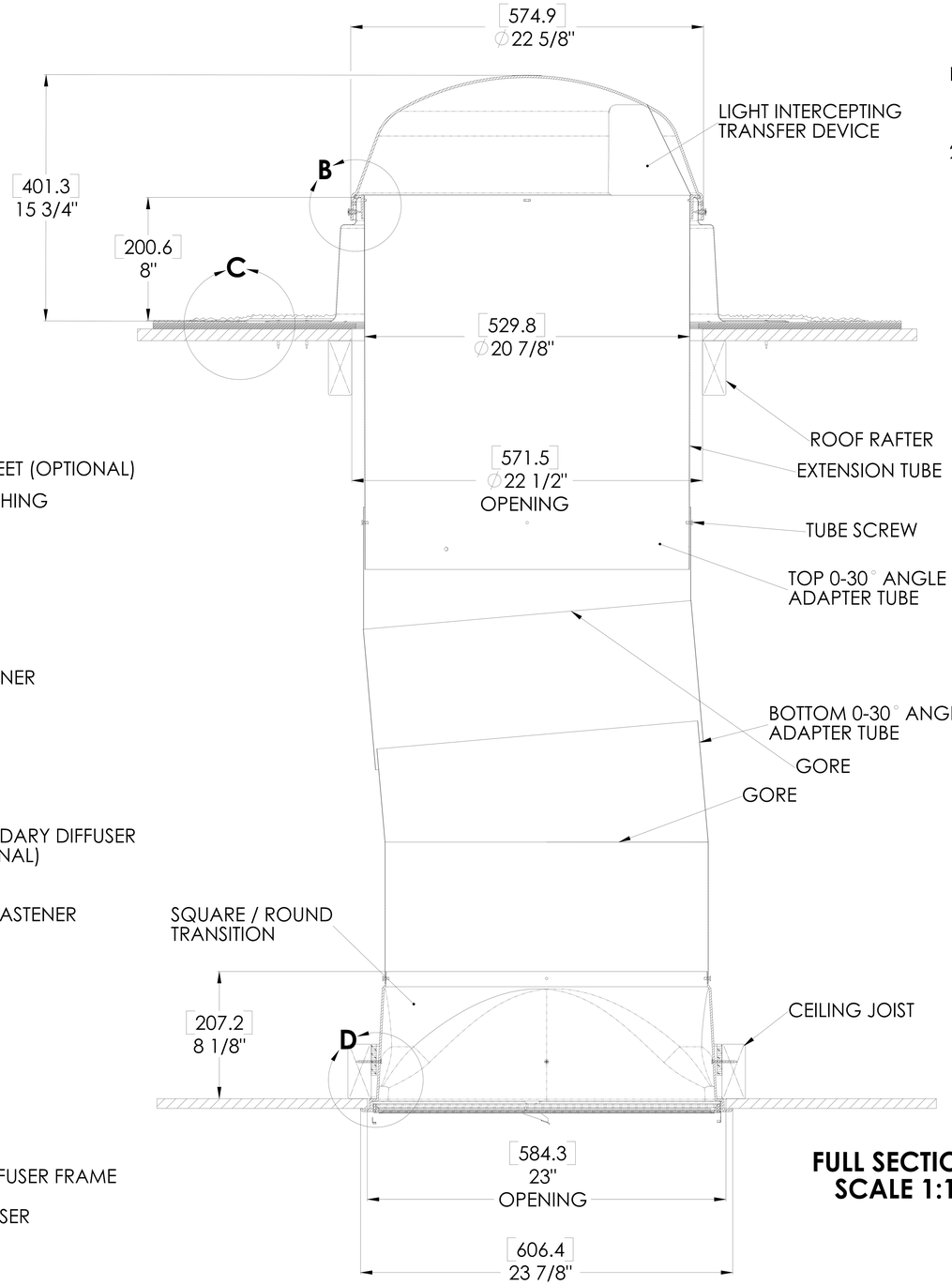

FULL SECTION
SCALE 1:1

NOTES:

1. DIMENSIONS IN BRACKETS ARE METRIC UNLESS OTHERWISE SPECIFIED.
2. 6" MINIMUM CLEARANCE SHOULD BE MAINTAINED FROM ALL SOLATUBE COMPONENTS AND OTHER PLENUM COMPONENTS.

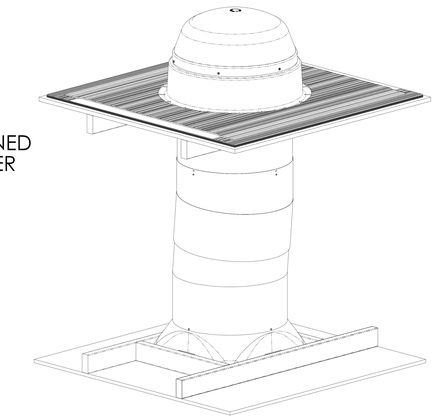

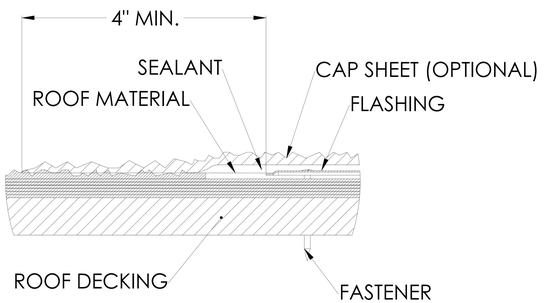

DETAIL C
SCALE 3 : 1

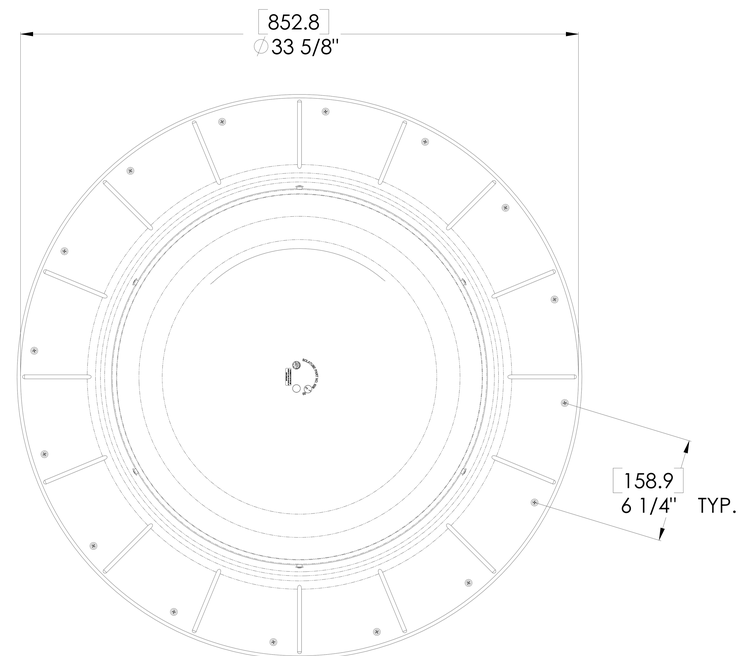

TOP VIEW
SCALE 1 : 1

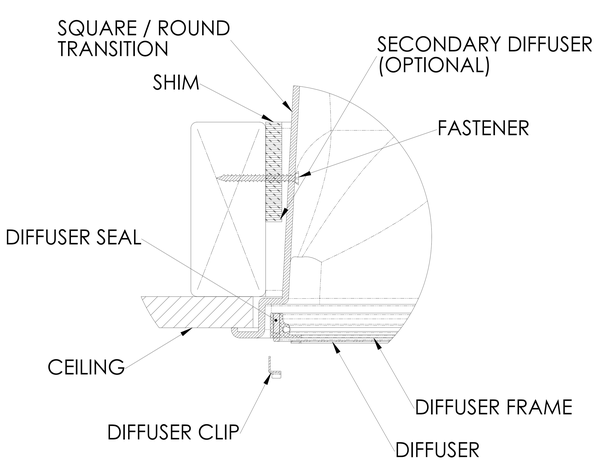

DETAIL D
SCALE 3 : 1

UNLESS OTHERWISE SPECIFIED: DIMENSIONS ARE IN INCHES TOLERANCES: ANGULAR: ±0.5° .X ± .1 .XX ± .02 .XXX ± .005	SOLATUBE INTERNATIONAL, INC. COPYRIGHT 2002 WWW.SOLATUBE.COM	SOLATUBE 2210 OAK RIDGE WAY VISTA, CALIFORNIA 92081-8341 PH (760) 597-4400
MATERIAL -- --	DRAWN BY: STEVENS DATE: 2/23/04	TITLE: 21-C SELF FLASHING HARD CEILING
FINISH --	CHECKED BY: -- DATE: --	SIZE: D DWG. NO. 21-SF-HC REV B
DO NOT SCALE DRAWING	APPROVED BY: -- DATE: --	SCALE: 1:1 SHEET 1 OF 1