SOLATUBE 21-O or 21-C SELF FLASHING W/ TURRET EXTENSION

REVISIONS				
ECO	REV.	DESCRIPTION	DATE	INC.
	A	RELEASED	2/27/2004	
1314	B	TITLE CHANGE	12/4/2006	CS

NOTES:

1. DIMENSIONS IN BRACKETS ARE METRIC UNLESS OTHERWISE SPECIFIED.
2. 6" MINIMUM CLEARANCE SHOULD BE MAINTAINED FROM ALL SOLATUBE COMPONENTS AND OTHER PLENUM COMPONENTS.

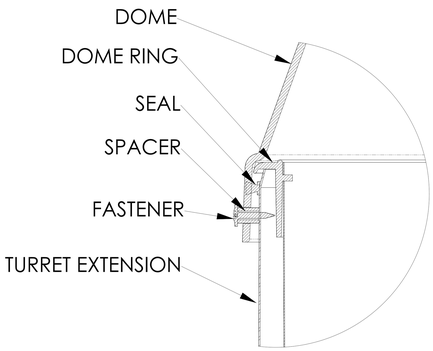

DETAIL B
SCALE 3 : 1

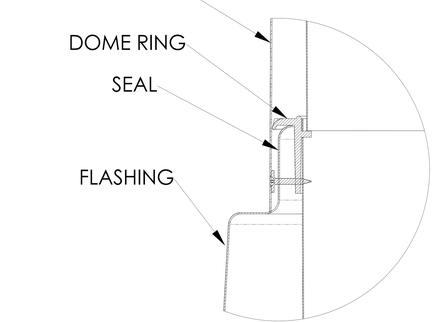

DETAIL C
SCALE 3 : 1

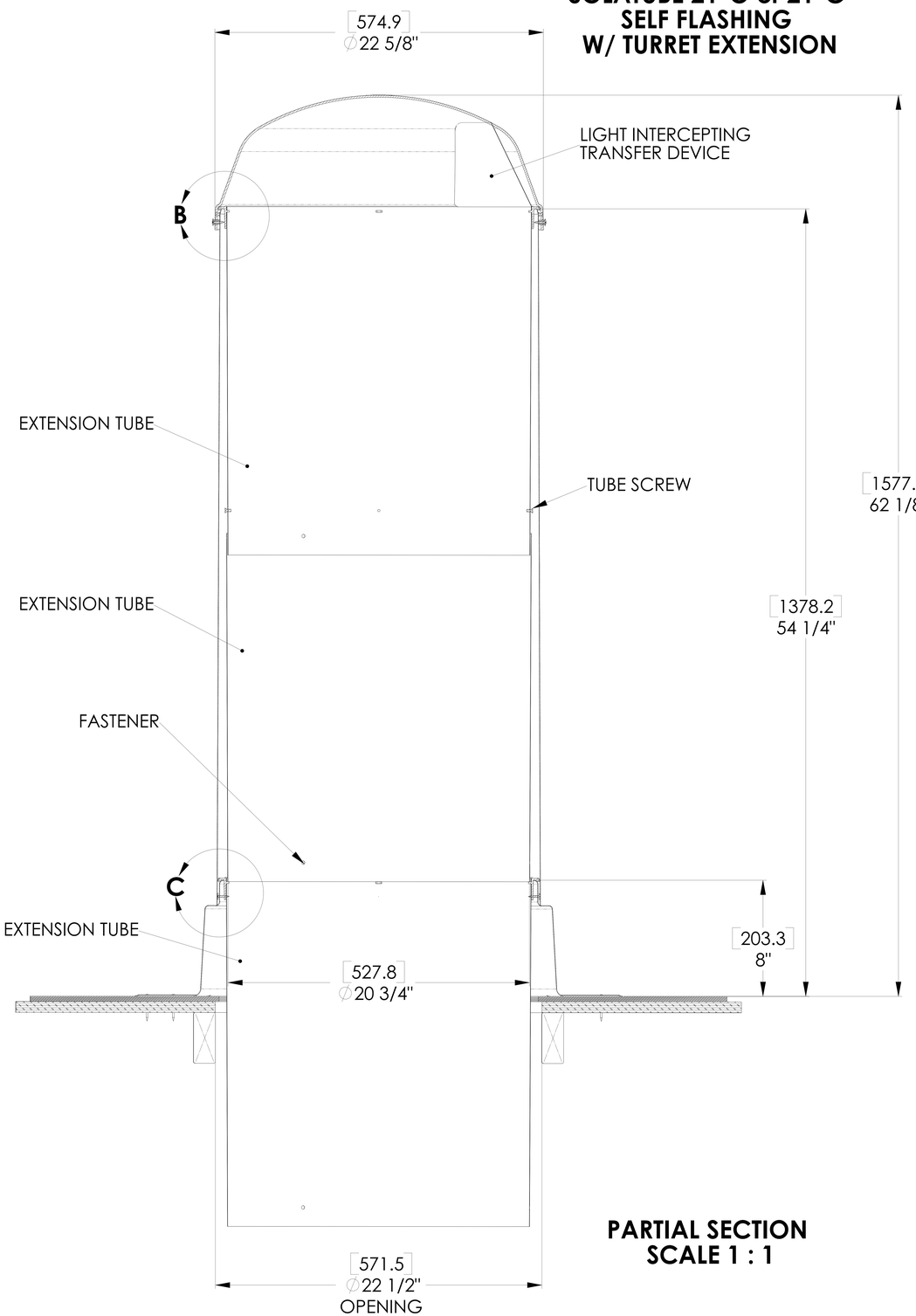

PARTIAL SECTION
SCALE 1 : 1

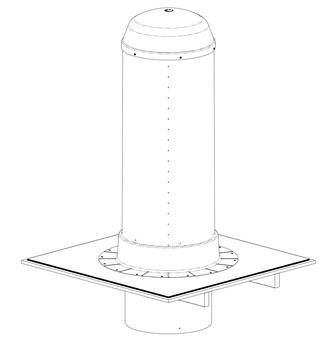

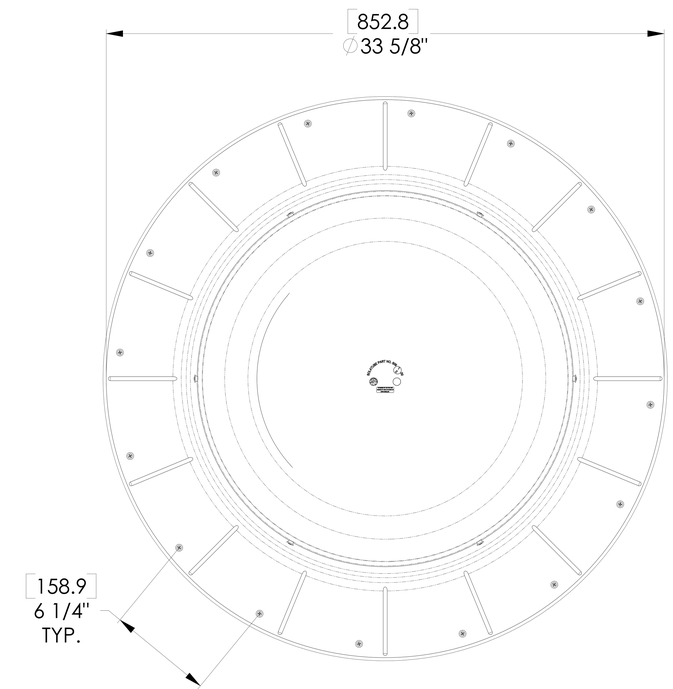

TOP VIEW
SCALE 1 : 1

UNLESS OTHERWISE SPECIFIED:
DIMENSIONS ARE IN INCHES
TOLERANCES:
ANGULAR: ±0.5°
.X ± .1
.XX ± .02
.XXX ± .005

MATERIAL
--
--

FINISH
--

DO NOT SCALE DRAWING

SOLATUBE INTERNATIONAL, INC.
COPYRIGHT 2002
WWW.SOLATUBE.COM

DRAWN BY: STEVENS — DATE: 3/19/04
CHECKED BY: -- — DATE: --
APPROVED BY: -- — DATE: --

SOLATUBE
2210 OAK RIDGE WAY
VISTA, CALIFORNIA 92081-8341
PH (760) 597-4400

TITLE: 21-O or 21-C SELF FLASHING W/ TURRET EXTENSION

SIZE: D
DWG. NO. 21-SF-TUREXT
REV: B
SCALE: 1:1
SHEET 1 OF 1